Historic, archived document

Do not assume content reflects current scientific knowledge, policies, or practices.

LIBRARY
BUREAU OF
AGRICULTURAL INDUSTRY

WIND-RESISTANT CONSTRUCTION FOR FARM BUILDINGS

LEAFLET NO. 87

U.S. DEPARTMENT OF AGRICULTURE

Issued December, 1932

WIND-RESISTANT CONSTRUCTION FOR FARM BUILDINGS

M. C. Betts, *Chief, Division of Plans and Service*, and Wallace Ashby, *Chief, Division of Structures, Bureau of Agricultural Engineering*

Well-constructed buildings seldom suffer serious damage, even in the worst windstorms. Bracing to provide reasonable security against wind damage costs little, and in many cases may be applied to existing buildings. It also helps to prevent cracked walls, broken plastering, warped floors, sagging doors, and sticking window sashes.

The cover illustration shows a barn partly wrecked because of weakness in its lower walls. Most of the studs were broken at the mow level, though the roof was undamaged, and the barn shifted until the siding on the end walls took up the load. The damage may have been caused by the push of the wind on the sides, or by a combination of push and suction.

Wind pressure inside the building—as when wind enters through open or broken windows—may tend to lift the roof or to blow out walls. Suction may have a similar effect. The chief safeguards against such damage are: (1) Adequate foundations; (2) anchorage between building and foundation; (3) rigid bracing of walls; (4) ties between inner and outer walls and between walls, roof, and floors; (5) roof bracing and (6) anchorage of roof structure to side walls.

FOUNDATIONS

If the building rests on wood posts set in the ground the posts should be of a durable species of wood, should contain a large proportion of heartwood, and preferably should be treated with preservatives. The space under the building should be ventilated to prevent rapid decay of the sills and joists. In most cases posts 7 inches or more in diameter at the top, set butt end down, 6 to 8 feet apart and 4 feet into the ground under the outside walls and main partitions (fig. 1, B and C), will furnish sufficient anchorage, though additional bearing may be needed to support the load. Where posts can not be set to this depth, they may be made reasonably secure by spiking short pieces of durable 2 by 6 inch material on the sides of each post near its bottom. (Fig. 1, D.) If the ground is soft or the posts extend several feet aboveground, they should be braced with plank diagonals. (Fig. 1, C.)

Heavy sills may be secured to posts by drift bolts as shown in Figure 1, B, or, if a plank sill is used the tops of the posts may be cut back to form seats and the planks spiked to the sides and top. (Fig. 1, C.)

Foundation piers of masonry should be set well into the ground to resist either lifting or side pressure. In firm soil concrete or brick piers about 12 inches square at the top (12 to 16 inches if of stone), with footings 4 inches wider on each side than the pier and 8 inches thick, spaced 8 to 10 feet apart and set below danger of heaving by

frost but not less than 18 inches into the ground, should provide good anchorage for single-story farmhouses. In brick or stone piers the anchor bolt should extend nearly to the bottom of the pier. (Fig. 2, A.) Concrete piers should have a ⅜-inch reinforcing rod with hooked ends in each corner. (Fig. 2, B.) A ¾-inch bolt, with washer or hooked end, should be set 12 inches in the pier for anchoring the sill. (Fig. 2, B.) Concrete piers may be precast in molds on the ground, and set in place as the footings are poured. Short stakes driven to the proper height (fig. 2, B) prevent the pier from settling before the concrete hardens.

With a full-depth cellar, the following minimum thicknesses are recommended for exterior masonry walls to support ordinary 1-story or 2-story frame farmhouses in storm areas: For rubble stone, 16 inches; for brick,[1] solid or hollow concrete blocks, or structural tile, 12 inches; for well-made solid concrete, 8 inches. Local experience may show that heavier walls are needed, especially if there are no cross walls in the cellar.

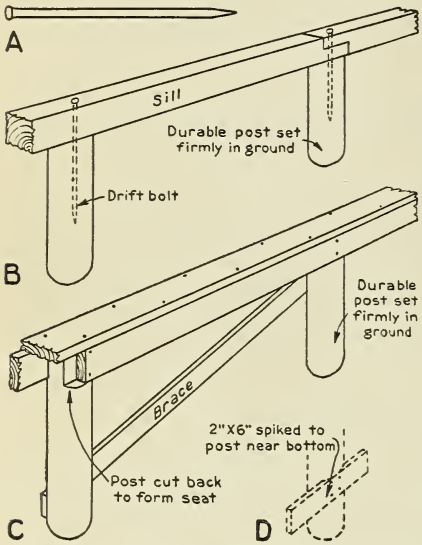

FIGURE 1.—Details of wood-post foundations: A, Drift bolt, usual size about ¾ by 16 inches; B, solid sill drift-bolted to post; C, built-up plank sill spiked to posts; D, short piece spiked to side of post for anchorage

Frame houses should be secured to foundation walls by ⅝ or ¾ inch anchor bolts placed 6 to 8 feet apart and set at least 18 inches into stone or solid concrete walls; if the foundation wall is of concrete blocks, tile, or brick, the bolts should extend at least 24 inches into the masonry. Whenever hollow units are used in the foundation wall, they should be filled with concrete around anchor bolts and beneath floor beams or other concentrated loads. Mortar in foundation masonry should be at least as strong as a cement-lime mortar composed of 1 volume of good Portland cement, 1 volume of lime putty or hydrated lime, and 6 volumes of clean sand. The mortar should be thoroughly mixed to uniform quality.

Farm buildings not bolted to the foundations when built should be anchored in one of the following ways: If the foundation walls are of building tile or concrete blocks, holes for the anchor bolts may readily be made (fig. 2, C) and filled with mortar after the bolts are in place. Holes for the bolts may be bored into the sills from the under side with an angle brace. If the building rests on solid walls or on masonry piers, the joists may be fastened to the foundation with angle irons and expansion bolts, as in Figure 2, D. When fastened to piers, the angle irons should extend to the footing.

[1] Under certain special conditions an 8-inch brick wall is recommended by the Common Brick Manufacturers' Association.

Joists and studs should be securely fastened to the sills. Toenailing alone is not sufficient. When horizontal siding is used with no sheathing or with horizontal sheathing, joists and studs may be made fast to a heavy sill as shown in Figure 2, C. Studs should rest on the sill and be spiked to the joists; both should be toenailed to the sill, and the joist should be spiked to the cleat. A twisted tie of 1/8 by 2 inch strap iron may be used if preferred. The opening

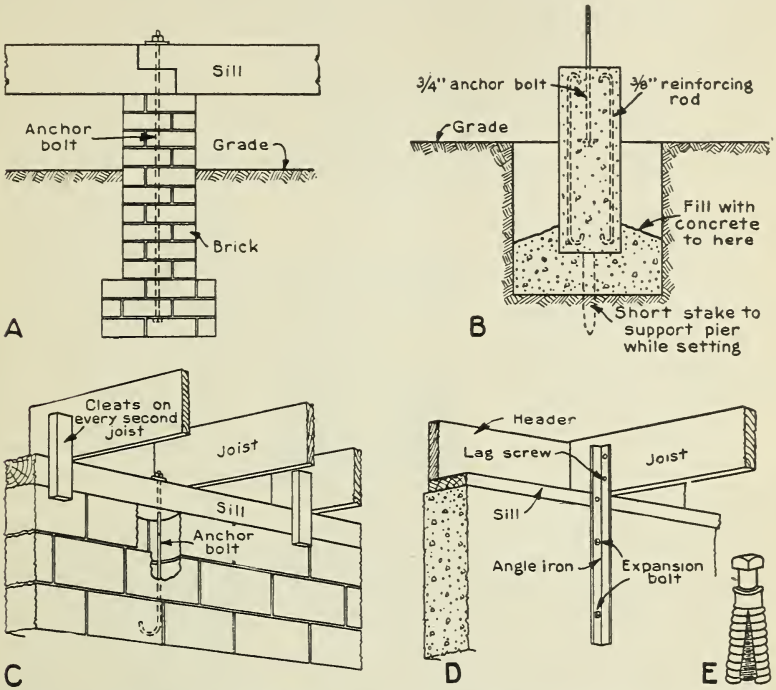

FIGURE 2.—Details of anchorage to masonry foundations: A, Small brick pier with long anchor bolt; B, precast concrete pier; C, placing anchor bolt in old wall; D, joist and sill anchored by angle iron and expansion bolts; E, one type of expansion bolt

between studs at the floor level should be closed by draft or fire-stop blocks.[2] (Fig. 5, C.)

Diagonal sheathing securely nailed to sills, studs, and plates (fig. 3, A) forms a very effective tie and strengthens the entire framing. Vertical boards and battens (fig. 3, B), if well nailed, form effective ties between sill, studs, and plate but do not stiffen the wall as much as diagonal sheathing and therefore make additional bracing necessary.

WALL BRACING[3]

New buildings with walls of stud construction should be sheathed diagonally (fig. 3, A), or braced in both directions at each corner in one of the two ways shown in Figure 4, A. Diagonal sheathing is preferred because tests by the Forest Products Laboratory of the

[2] See Farmers' Bulletin 1590, Fire Protective Construction on the Farm.
[3] See also Leaflet 77, Bracing Farm Buildings.

United States Department of Agriculture have shown that diagonally sheathed walls are about twice as stiff and strong against end thrust as those sheathed horizontally and braced as in Figure 4, A, and are from four to eight times as stiff and strong as horizontally sheathed walls without bracing. Interior partitions may also be braced in one of the ways shown in Figure 4, A. If covered on only one side, walls already built may be reinforced as at *b*, or by diagonal braces formed of short 2 by 4 inch pieces accurately fitted between studs and well nailed. A tight fit between studs and braces is essential.

Barns or other long buildings without cross walls are often damaged by wind, especially when empty. In such barns knee braces should be used at all posts to stiffen the building and resist wind pressure. (Figs. 4, B and 5, B.) It is especially important in such buildings to brace and anchor the end walls carefully, for much of the pressure on the sides is carried to the ends by the mow floor and the roof. If the end walls are weakened by several window or door openings, studs at the sides of the openings should be doubled and extra braces should be used. (Fig. 4, E.) Strong headers should be used over the openings, or the wall may be trussed over wide doors. (Fig. 4, E.)

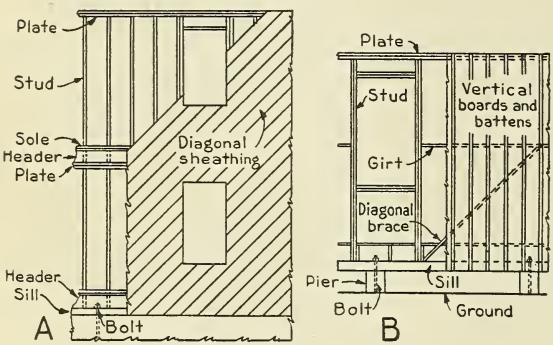

FIGURE 3.—Methods of securing joists and studs to sills: A, Diagonal sheathing; B. vertical board-and-batten siding

Masonry walls may be effectively braced with buttresses (fig. 4, F) spaced 12 to 16 feet apart, the distance corresponding to truss or girder spacing. The projection of the buttress at the bottom should be about 1 inch per foot of height of the wall, and wall and buttress should be firmly bonded together. The footing of the buttress should have the same depth and projection as the footing of the main wall.

Walls should be firmly joined together at all junctions. This may be done by spiking the end studs of one wall to the adjacent studs of the other, or to blocks spiked between these studs. (Fig. 4, C.) The plates also should lap and be spiked together. Masonry walls should be carefully bonded together at intersections, and stud partitions anchored to the masonry by metal ties.

Side walls of barns should be tied to the mow floors at intervals of 12 to 16 feet by inclined braces, as shown in Figure 4, D. On account of the heavy strain on them, these braces should be bolted to both the floor joists and the roof trusses, as shown. End walls require similar bracing. Barns already built may easily be reinforced with braces of this kind. Persons contemplating the building of new barns should obtain drawings showing proper construction.[4]

[4] Construction drawings for some types of barns are available from the Bureau of Agricultural Engineering, U. S. Department of Agriculture.

FLOORS

Floors play an important part in stiffening the building and carrying wind loads to the end walls. To secure necessary strength, flooring should be well nailed to the joists, and all joists should be braced with lines of bridging not more than 8 feet apart. Where a double floor is used the subfloor should be laid diagonally.

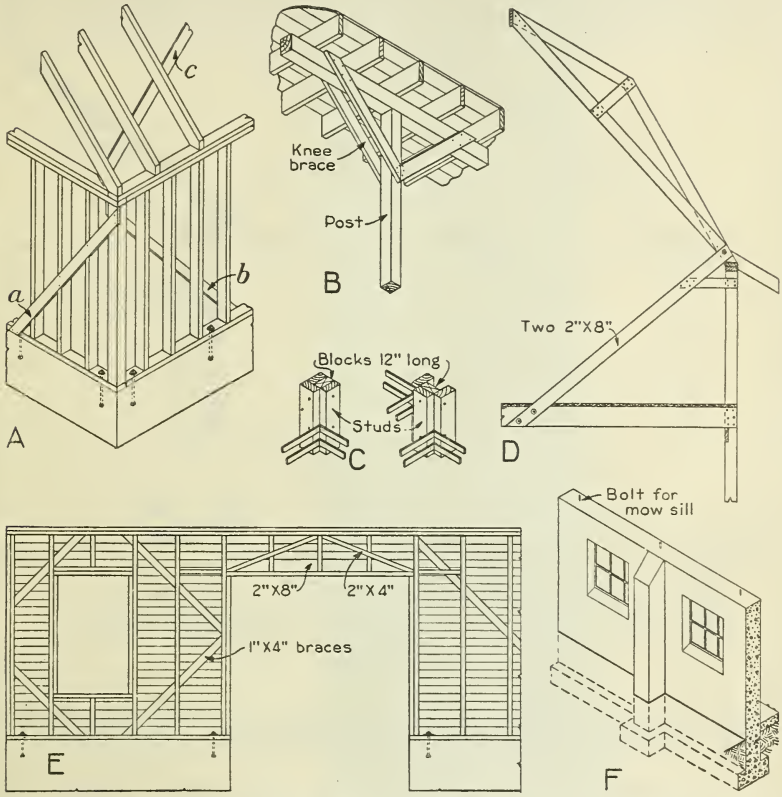

FIGURE 4.—Methods of bracing walls and frame: A, Diagonal corner braces; *a*, corner brace let into studs; *b*, corner brace nailed back of studs; *c*, wind brace for roof; B, knee braces; C, studs spiked to blocks at wall junction; D, brace from side wall to mow floor of barn; E, bracing around openings; F, masonry wall reinforced by buttresses

In frame buildings all joists should be spiked to the studs and in masonry construction every third or fourth joist should be secured to the wall with metal ties.

ANCHORING THE ROOF

Wide, overhanging eaves greatly increase the chance that the roof may be blown off; eaves with little projection are safer in this respect. If wide eaves are used special care should be taken to anchor the roof to the walls. Porch roofs and other projecting parts should also be firmly secured to the main building.

Studs that are continuous from foundation to plate provide the best tie between foundation and roof but are not ideal from other standpoints. Continuous studs are not needed if diagonal sheathing or vertical siding is used. Rafters should be securely fastened to the studs and plates. In many cases the simple tie (fig. 5, A) or the combined knee brace and tie (fig. 5, B) may be used effectively. Simple iron fasteners to secure rafters and plates to the studs (fig. 5, D and E) are sometimes convenient. A very strong though somewhat unusual type of construction for houses is shown in Figure

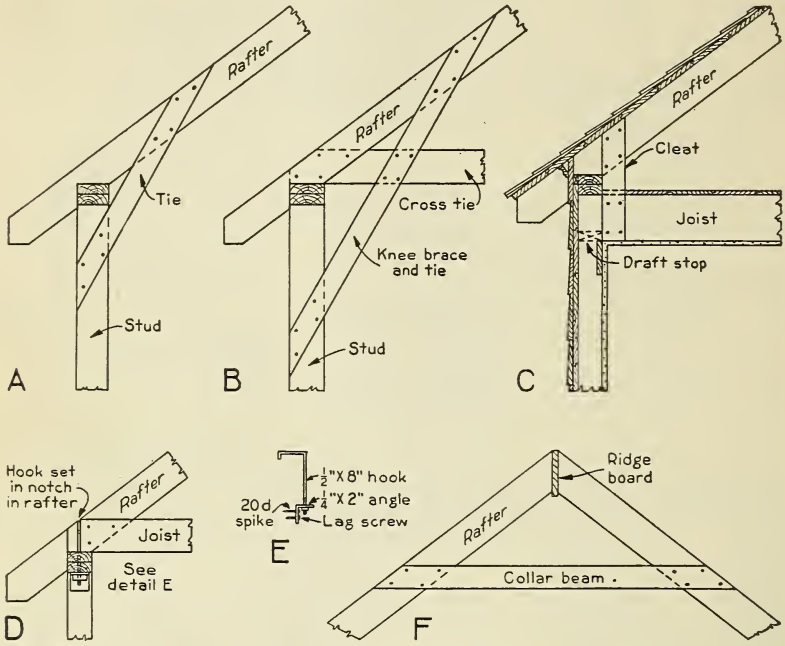

FIGURE 5.—Methods of bracing and fastening rafters: A, a simple rafter tie; B, knee brace and tie; C, strong construction at eaves of house; D, rafter secured to plate and stud by metal fastener; E, a simple iron fastener; F, collar beam

5, C. The draft or fire stop between the studs does not add to the strength but is valuable in retarding spread of fire.

Collar beams (fig. 5, F) should be used on every second or third pair of rafters, and gable or gambrel roofs should be stiffened with diagonal braces let into the upper side of the rafters or nailed on the under side, as shown at *c* in Figure 4, A. Where the space under the roof is not to be used, the rafters may be braced to the joists below by light struts. Additional bracing needed by the roof will depend upon the size and type of the roof framing.

Roof covering should be well nailed with rust-resistant nails, both to preserve the roof and to prevent damage to other buildings by flying pieces of roofing. Damage to windows from flying débris may be prevented by wooden shutters.

U. S. GOVERNMENT PRINTING OFFICE: 1932

For sale by the Superintendent of Documents, Washington, D. C. - - - - - - Price 5 cents